Digital control kit KIT_600W_LLC_DI_CTRL

From **analog** to **digital** control

Di Domenico Francesco (IFAT PMM ACDC AE)
Florian Zechner (IFAT PMM ACDC AE)

Digital control kit KIT_600W_LLC_DI_CTRL for EVAL_600W_12V_LLC



Ordering code:
KIT_600W_LLC_DI_CTRL

This adapter kit is intended for use when replacing an analog control card with its digital alternative. The kit offers as a replacement option Infineon's XMC4200 microcontroller ARM® Cortex®.

Board components

- XMC™ microcontroller (XMC4200-Q48K256AB)
- Voltage regulator (IFX91041EJV33)
- Silicon transistor (BC846PN)

To be used with the following boards

- EVAL_600W_12V_LLC_C7
- EVAL_600W_12V_LLC_P7

Copyright © Infineon Technologies AG 2017. All rights reserved.

Product features

BC846PN

- High current gain
- Low collector-emitter saturation voltage
- Two (galvanic) internal isolated NPN/PNP transistor in one package
- Qualified according AEC Q101



IFX91041EJ V33

- Wide supply voltage operation range
- Low current consumption
- Current limitation and
- Overtemperature protection
- Enable, soft start, sync
- Features



XMC4200-Q48K256AB

- ARM® Cortex®-M4, 80 MHz, incl. single cycle DSP MAC and floating point unit (FPU)
- 8-channel DMA + dedicated DMA for USB
- USB 2.0 full-speed device
- CPU Frequency: 80 MHz
- eFlash: 256 kB including hardware ECC
- 40 kB SRAM
- Package: PG-LQFP-48



Copyright © Infineon Technologies AG 2017. All rights reserved.

Bill of material (Rework)

Part	Value	Pieces	Tolerance	Device	Assembling info.	Manufacturer
C3	10n/50V	1		C-EU_C0805*	Replace with 10n/50V	
R19	330R	1	±1%	R-EU_R0805 *	Replace with 330R	
R20	330R	1	±1%	R-EU_R0805 *	Replace with 330R	
R36	n.a.	1		R-EU_R0805 *	disassemble	
IC1	Board	1		KIT_600W_LLC_DI_CTRL	See above	Infineon

* All needed replacement material is included in the KIT_600W_LLC_DI_CTRL.

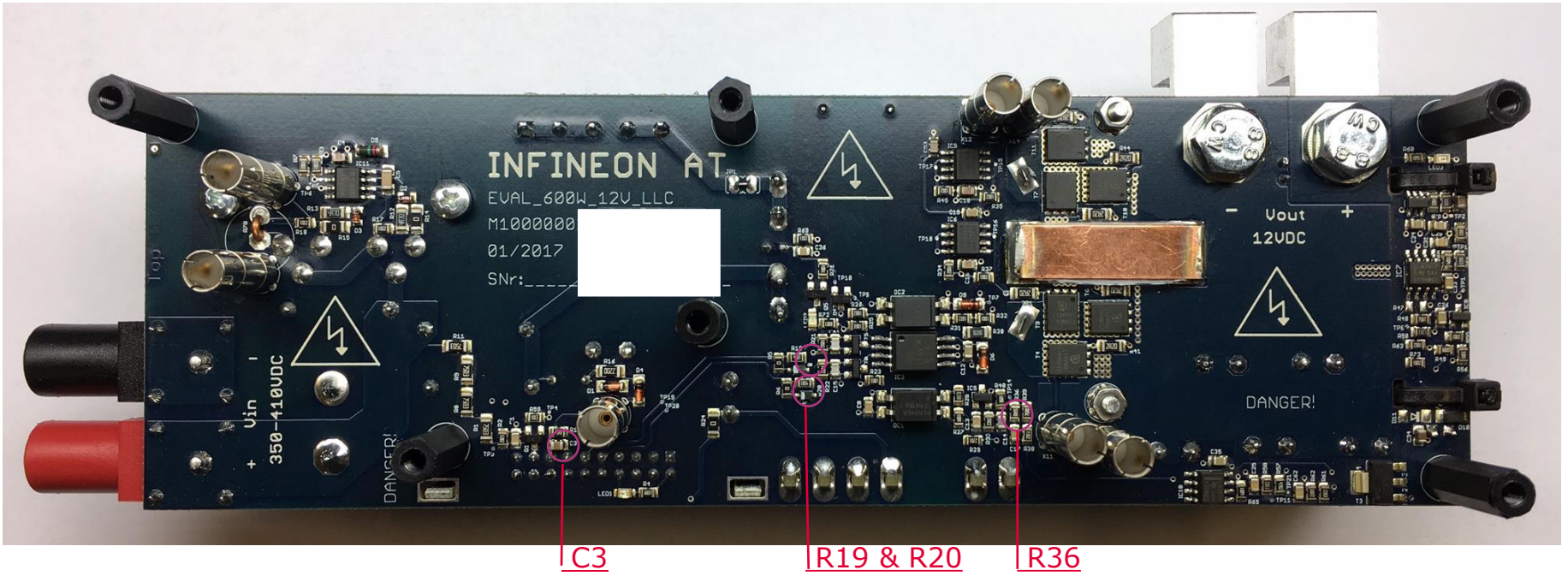

Copyright © Infineon Technologies AG 2017. All rights reserved.

Schematic

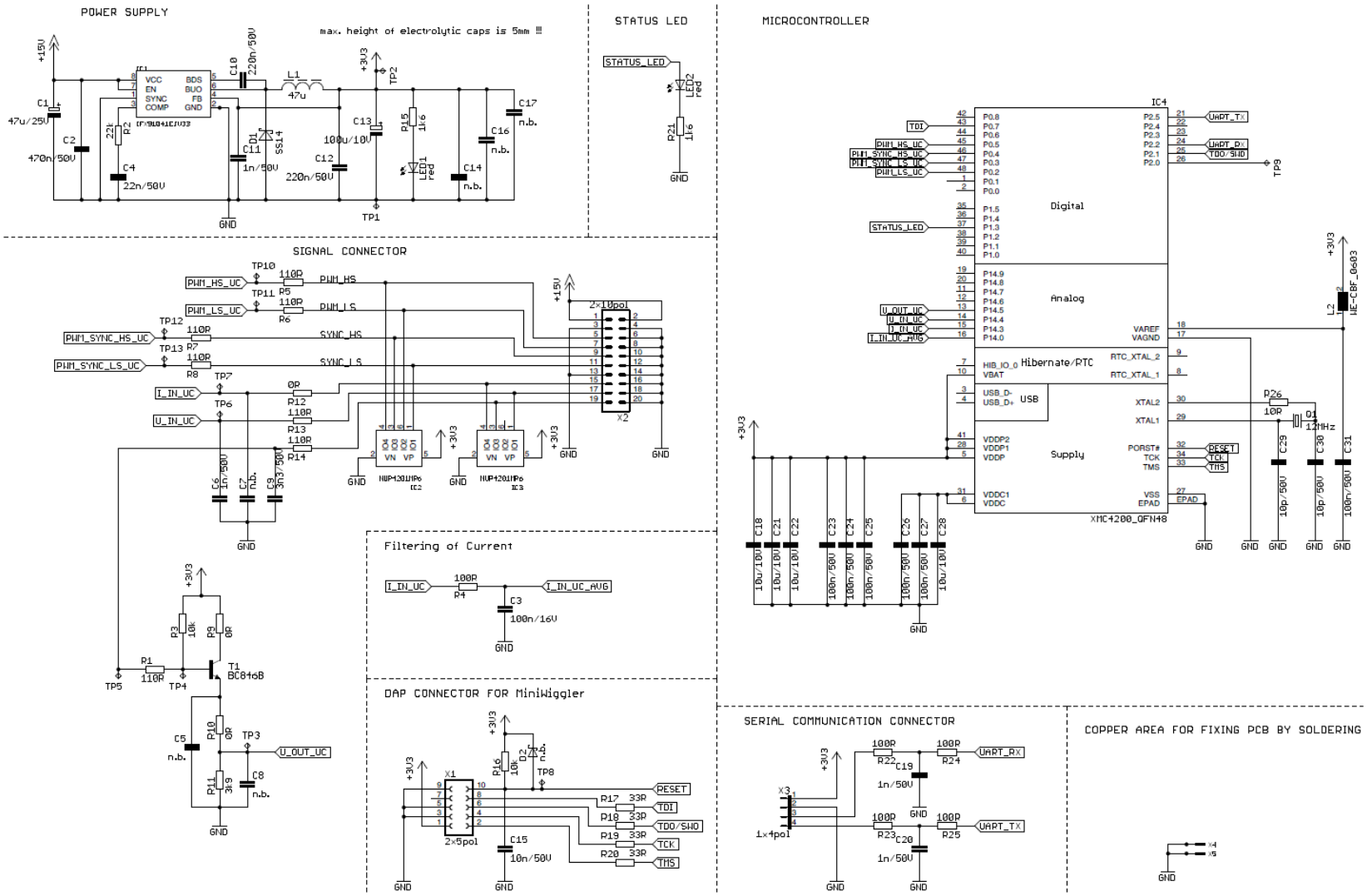

Copyright © Infineon Technologies AG 2017. All rights reserved.

Base board EVAL_600W_12V_LLC_xx with control card KIT_600W_LLC_DI_CTRL

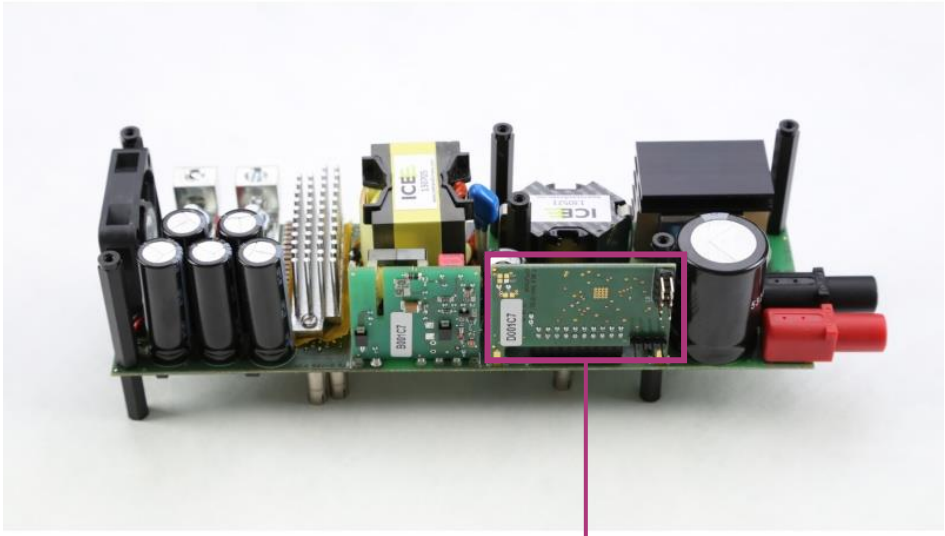

Digital control card:
KIT_600W_LLC_DI_CTRL

Ordering code:
EVAL_600W_12V_LLC_C7
EVAL_600W_12V_LLC_P7

Infineon's 600 W 12 V LLC boards showcase how to design a half-bridge LLC stage of a server SMPS with the target to meet 80+ Titanium standard efficiency requirements. The **KIT_600W_LLC_DI_CTRL** can be used with any of Infineon's EVAL_600W_12V_LLC boards, replacing the analog control card.

Application note:

- Evaluation Board EVAL_600W_12V_LLC_C7_d with 600V CoolMOS™ C7
- Evaluation Boad EVAL_600W_12V_LLC_P7 with 600V CoolMOS™ P7

www.infineon.com/600W-LLC-eval

Copyright © Infineon Technologies AG 2017. All rights reserved.

Support



Technical Material	› Application Notes › Simulation Models › Datasheets › PCB Design Data	› www.infineon.com/600W-LLC-eval
Evaluation Boards	› Evaluation Boards › Demoboards › Reference Designs	› www.infineon.com/evaluationboards
Videos	› Technical Videos › Product Information Videos	› www.infineon.com/mediacenter

Copyright © Infineon Technologies AG 2017. All rights reserved.

Support
Online tools and services

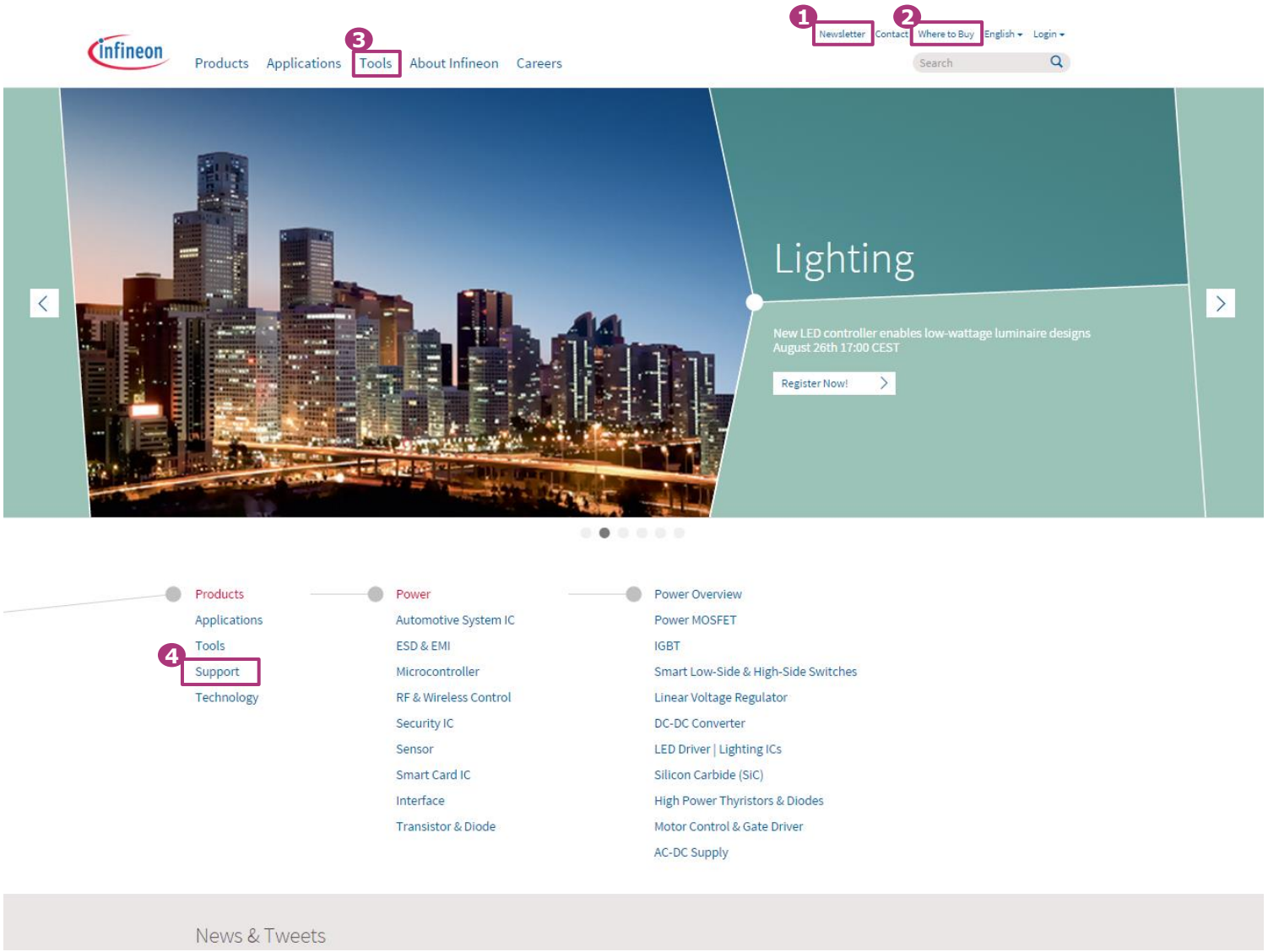

1. **Subscribe to Newsletter**
2. **Where to Buy**
3. **Tools, Finders and Selectors**
4. **Support**

Copyright © Infineon Technologies AG 2017. All rights reserved.



Part of your life. Part of tomorrow.

Infineon